Think Automation and beyond...

NC1V
Circuit Breakers

IDEC CORPORATION

IDEC's original Spring-up Terminals and Cover Provide IP20 Fingersafe Protection.

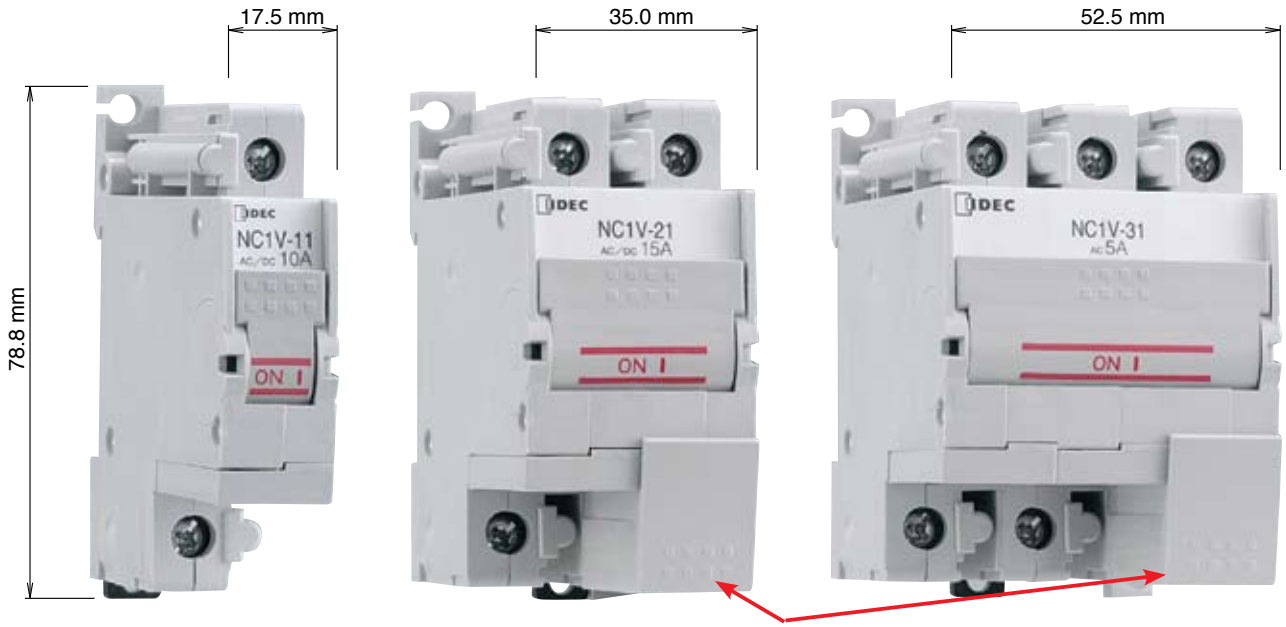

Fingersafe, spring-up terminals reduce wiring time.

Ring terminals can be installed as screws are captive.

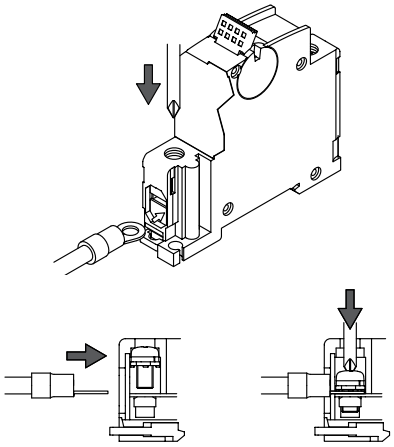

Main Circuit Terminals are Fingersafe (IP20)

Spring-up, fingersafe terminals do not require a cover.

Retractable Lever

The lever retracts when the circuit breaker is set. As a result, accidental operation due to bumping the lever, is prevented. Status of the circuit breaker can easily be determined by observing the position of the lever.

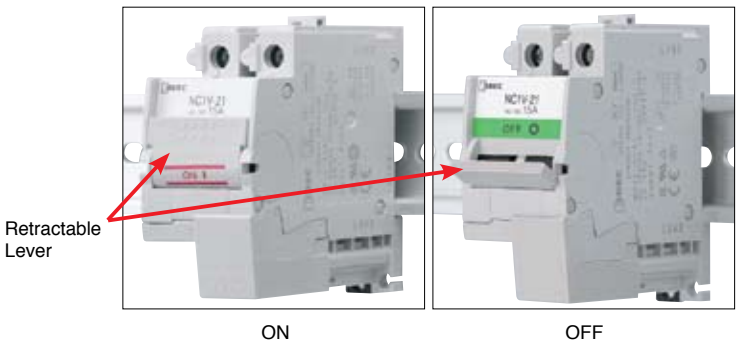

Slim Design Saves Space

1-pole	17.5mm Wide
2-pole	35.0mm Wide
3-pole	52.5mm Wide

Auxiliary/Alarm Contact Terminals are Equipped with Fingersafe Covers

Auxiliary/Alarm Contact, and Relay Trip Voltage Coil Terminals are Equipped with Fingersafe Covers.

35mm-wide DIN Rail Mounting or Direct Panel Mounting

Distinguishing Characteristics

Wide variety of rated currents and tripping curves. One and two pole models are AC/DC compatible and allow for a reduction in inventory.

Rated Short-circuit Capacity 2500A

Available with Inertia Delay

Allows for use with large inrush currents such as motors and lamps.

Safe Trip-free Mechanism

The circuit remains open even when the operator is turned on after tripping (unit must be manually reset after removing the cause of the tripping).

Available with Auxiliary or Alarm Contacts

Auxiliary or Alarm Contact
(Shown without terminal cover.)

Conforms to various international standards

After tripping, the retractable lever is in the middle position.

Circuit breaker must be turned off before it can be reset.

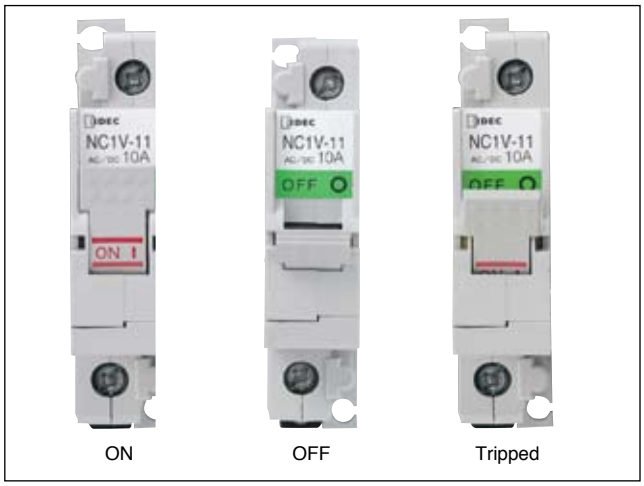

NC1V Circuit Breakers

IDEC's spring-up, fingersafe terminals enhance reliability and safety.

- Superior protection for a wide range of devices from sensitive electronic equipment to electrical control circuits. Applications include semi-conductor manufacturing equipment, electronic controllers, computers, microprocessors, communications equipment, power supplies, machine tools, motors, office equipment, and more.
- Excellent tripping time curve performance
- Flat retractable lever for safety operations
- Slim housing design
- Spring-up terminals
- Fingersafe main circuit terminals
- Color (red/green) contact position indicator
- DIN rail or direct panel mounting (through-panel mounting brackets available)
- One and two pole models have both AC and DC voltages in each device
- Auxiliary / alarm contacts

Applicable Standards	Certification Mark		Certification Organization (File No.)
UL1077			E68029
CSA C22.2 No. 235			LR83454
EN60934			B07 09 13332 063
			European Commission's Low Voltage Directive
GB17701-1999			No. 2008010307265840
Electrical Applicance and Material Safety Law Technical Standard	Series Trip		JET
	Relay Trip		

Note: TÜV, CE, and CCC marks are applicable for series trip type only.

Specifications

Operator Style		Retractable lever		
Internal Circuit		Series trip (current trip), Relay trip (voltage trip)		
Protection Method		Hydraulic magnetic tripping system, Magnetic tripping system (voltage trip)		
No. of Poles		1-pole	2-pole	3-pole
Rated Voltage (AC/DC) Note 1		250V AC 50/60Hz, 65V DC	250V AC 50/60Hz, 125V DC	250V AC, 50/60Hz
Series Trip (Current Trip)	Rated Short-circuit Capacity	250V AC, 2500A 65V DC, 2500A	250V AC, 2500A 125V DC, 2500A	250V AC, 2500A
	Rated Current	0.1A, 0.3A, 0.5A, 1A, 2A, 3A, 5A, 7A, 10A, 15A, 20A, 25A, 30A		
	Operation Characteristics Note 2	Time delay curve curve M (slow), curve A (medium), S (instantaneous) Curves M and A are also available with inertia delay option.		
Relay Trip (Voltage Trip) Note 3	Rated Current	30A		
	Trip Voltage	24 to 48V DC (at 25°C) Voltage application duration 10 sec maximum, tripping time 0.1 sec maximum (at rated voltage)		
Auxiliary Contact/ Alarm Contact	Contact Rating	125V AC 3A (resistive load), 30V DC 2A (resistive load)		
	Minimum Applicable Load	24V DC 1mA (resistive load, reference value)		
Insulation Resistance		100MΩ minimum (500V DC megger)		
Dielectric Strength		2,000V AC, 1 minute (between terminals when main contacts are open, between live parts of different poles, between live and dead parts) 600V AC (between terminals when auxiliary circuits are open)		
Vibration Resistance (with rated current applied)		Damage limits: 147 m/s^2 (10 to 55 Hz) (1-pole, 2-pole), 78 m/s^2 (3-pole) Operating extremes: 98 m/s^2 (1-pole, 2-pole), 78 m/s^2 (3-pole)		
Shock Resistance (S time delay curve: 80% rated current, A, M time delay curve: 100% rated current)		Damage limits: 490 m/s^2 (1-pole, 2-pole), 297 m/s^2 (3-pole) Operating extremes: 196 m/s^2 (S, A, M types)		
Electrical Life		10,000 cyles minimum (at rated curent), 10 operations per minute		
Reference Temperature		40°C		
Operating Temperature		–10 to +60°C (no freezing) Rated current is based on an ambient temperature of 40°C. When the operating temperature exceeds 40°C, derate the rated current by using the factors shown below.		
Operating Humidity		45 to 85% RH (no condensation)		
Terminal Style	Main Circuit Terminal	Spring-up, fingersafe terminal: M4 screw (up to 20A), M5 screw (25A and 30A)		
	Auxiliary/Alarm Contacts, Voltage Coil Terminal	M3.5 screw		
Weight (approx.)		1-pole: 90g, 2-pole: 170g, 3-pole: 260g		

Note 1: 3-pole type is for AC voltage only.
Note 2: For S (instantaneous) tripping curve, humming sound may occur when used in an AC sinusoidal-wave current circuit around 80% of the rated current, however, the performance of the circuit breaker will not be affected.
To avoid unnecessary tripping, do not use in circuits where inrush currents may be present.
Note 3: Relay trip (voltage trip) type is not equipped with an overcurrent trip function.

Operating Temp.	Derating Factor
50°C	0.9
55°C	0.8
60°C	0.7

- Do not use the NC1V circuit breakers in environments where they are exposed to extreme temperature, humidity, dust, corrosive gases, vibration, shock, or in a circuit where inrush current may be present, otherwise unnecessary operation and damage may occur.

Part No. Configuration

NC1V - 2 1 00 F - 30A A DC24V

1 **Type**
NC1V: Lever style
DIN rail and panel mounting

2 **No. of Poles**
1: 1-pole
2: 2-pole
3: 3-pole

3 **Internal Circuit**
1: Series trip (current trip)
5: Relay trip (voltage trip)

4 **Auxiliary/Alarm Contacts**
00: None
11: With one auxiliary contact
12: With two auxiliary contacts
13: With three auxiliary contacts
21: With one alarm contact
31: With one auxiliary contact and one alarm contact
32: With two auxiliary contacts and one alarm contact

5 **Inertia Delay**
Blank: Without
F: With
∗ Inertia delay is for AC voltage only.
∗ Available with medium and slow types (not applicable with relay trip).

6 **Rated Current**
0.1A, 0.3A, 0.5A, 1A, 2A, 3A, 5A, 7A, 10A 15A, 20A, 25A, 30A
∗ Specified for series trip only.

7 **Time Delay Curve**
M: Slow
A: Medium
S: Instantaneous
∗ For both AC/DC.
∗ Specified for series trip only.

8 **Voltage Trip Coil Voltage**
DC24V: 24-48V DC
∗ Specified for relay trip only.

Models

• Specify rated current, time delay curve, or voltage trip coil voltage in place of 6 7 8 when ordering.

Internal Circuit	No. of Poles	Inertia Delay	Auxiliary Contact Alarm Contact	Part No.	Code		
					6 Rated Current	7 Time Delay Curve	8 Voltage Trip Coil Voltage
Series Trip (Current Trip)	1-pole	–	–	NC1V-1100-6 7	0.1A 0.3A 0.5A 1A 2A 3A 5A 7A 10A 15A 20A 25A 30A	M (slow) A (medium) S (instantaneous)	–
			One Auxiliary Contact	NC1V-1111-6 7			
			One Alarm Contact	NC1V-1121 6 7			
		With	–	NC1V-1100F-6 7			
			One Auxiliary Contact	NC1V-1111F-6 7			
			One Alarm Contact	NC1V-1121F-6 7			
	2-pole	–	–	NC1V-2100-6 7			
			One Auxiliary Contact	NC1V-2111-6 7			
			Two Auxiliary Contacts	NC1V-2112-6 7			
			One Alarm Contact	NC1V-2121-6 7			
			One Auxiliary Contact and One Alarm Contact	NC1V-2131-6 7			
		With	–	NC1V-2100F-6 7			
			One Auxiliary Contact	NC1V-2111F-6 7			
			Two Auxiliary Contacts	NC1V-2112F-6 7			
			One Alarm Contact	NC1V-2121F-6 7			
			One Auxiliary Contact and One Alarm Contact	NC1V-2131F-6 7			
	3-pole	–	–	NC1V-3100-6 7			
			One Auxiliary Contact	NC1V-3111-6 7			
			Two Auxiliary Contacts	NC1V-3112-6 7			
			Three Auxiliary Contacts	NC1V-3113-6 7			
			One Alarm Contact	NC1V-3121-6 7			
			One Auxiliary Contact and One Alarm Contact	NC1V-3131-6 7			
			Two Auxiliary Contacts and One Alarm Contact	NC1V-3132-6 7			
		With	–	NC1V-3100F-6 7			
			One Auxiliary Contact	NC1V-3111F-6 7			
			Two Auxiliary Contacts	NC1V-3112F-6 7			
			Three Auxiliary Contacts	NC1V-3113F-6 7			
			One Alarm Contact	NC1V-3121F-6 7			
			One Auxiliary Contact and One Alarm Contact	NC1V-3131F-6 7			
			Two Auxiliary Contacts and One Alarm Contact	NC1V-3132F-6 7			
Relay Trip (Voltage Trip)	1-pole	–	–	NC1V-1500-8	–	–	DC24V
	2-pole			NC1V-2500-8			
	3-pole			NC1V-3500-8			

Note: Inertia delay is for an AC circuit. Also, time delay curve of S (instantaneous) is not available with inertia delay.

Internal Circuits

• 1-pole

NC1V-1100
(Without auxiliary/alarm contacts)

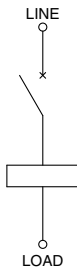

NC1V-1111
(With auxiliary contact)

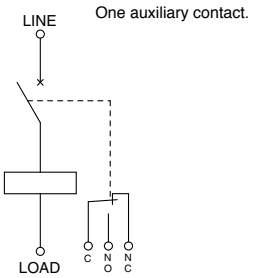

NC1V-1121
(With alarm contact)

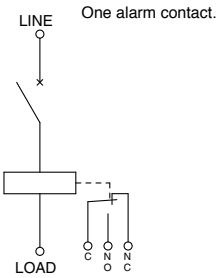

NC1V-1500
(Relay Trip)

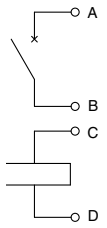

• 2-pole

NC1V-2100
(Without auxiliary/alarm contacts)

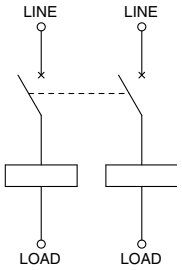

NC1V-2111
(With auxiliary contact)

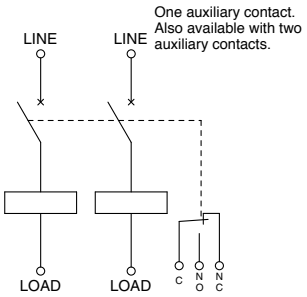

NC1V-2121
(With alarm contact)

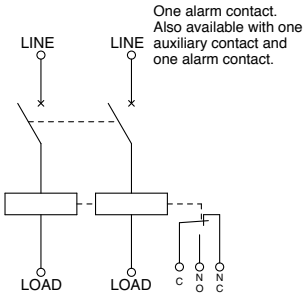

NC1V-2500
(Relay Trip)

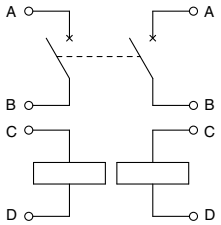

• 3-pole

NC1V-3100
(Without auxiliary/alarm contacts)

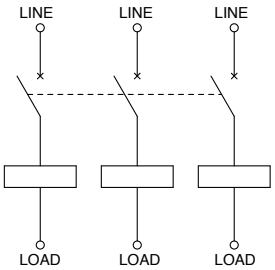

NC1V-3111
(With auxiliary contact)

One auxiliary contact. Also available with two or three auxiliary contacts.

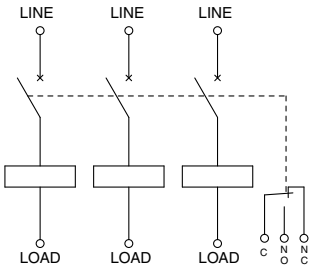

NC1V-3121
(With alarm contact)

One alarm contact. Also available with one auxiliary and one alarm contacts, and two auxiliary and one alarm contacts.

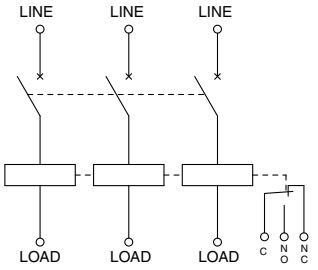

NC1V-3500
(Relay Trip)

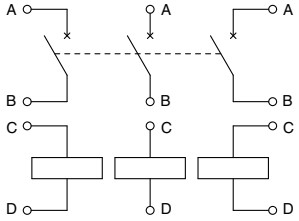

Overcurrent-Time Delay Characteristics (sec at 40°C) [vertical mounting]

Item	Time Delay Curve	Percent of Rated Current								
		100%	125%	150%	175%	200%	400%	600%	800%	1000%
AC (50/60Hz)/DC	S (instantaneous)	NO TRIP	—	∗0.005 to 0.1	0.003 to 0.06	0.0027 to 0.05	0.002 to 0.03	0.002 to 0.028	0.002 to 0.025	0.002 to 0.022
	A (medium)	NO TRIP	∗25 to 240	16 to 140	—	6 to 32	0.4 to 4	0.0055 to 1.5	0.004 to 0.8	0.004 to 0.65
	M (slow)	NO TRIP	∗60 to 600	30 to 200	—	9 to 60	0.4 to 10	0.006 to 4.5	0.004 to 1.8	0.004 to 0.8
AC (50/60Hz)	With Inertia Delay A (medium)	NO TRIP	25 to 240	—	—	6 to 32	0.8 to 6	0.09 to 3.5	0.02 to 1.8	0.01 to 1.0
	With Inertia Delay M (slow)	NO TRIP	60 to 600	—	—	10 to 60	0.8 to 10	0.06 to 4.5	0.02 to 3	0.01 to 1.75

∗: MAY TRIP on DC

Time Delay Curves at 40°C

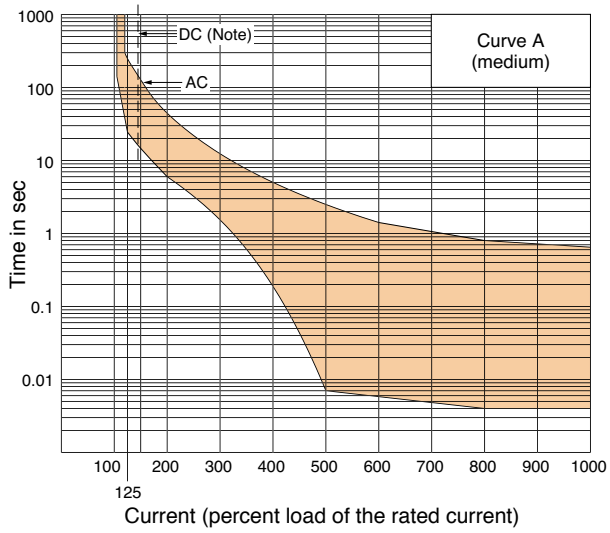

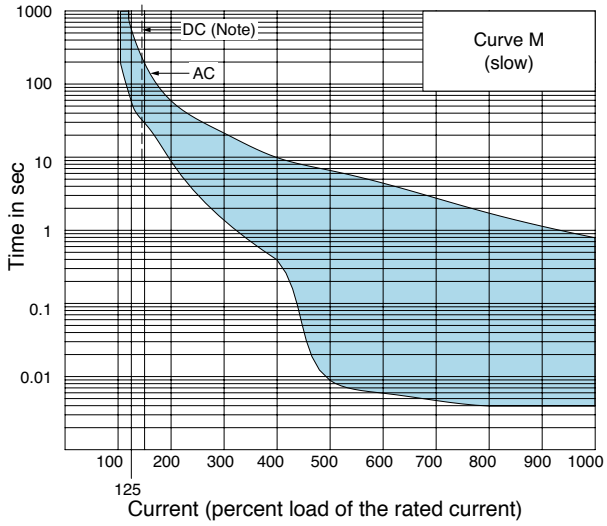

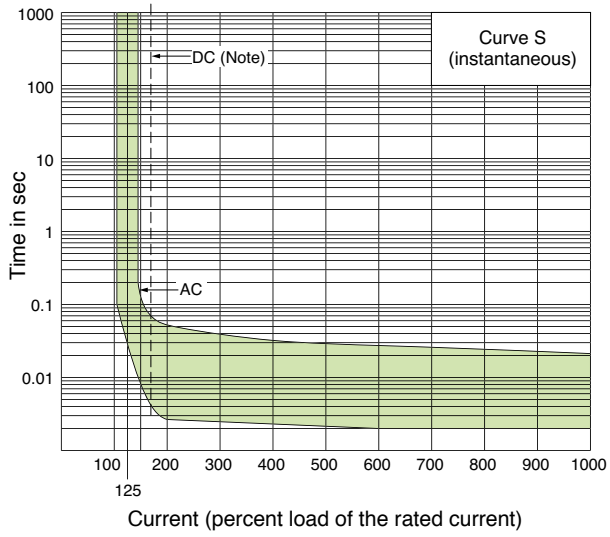

Note: The entire shaded area applies to AC.
For DC, the shaded area on the right of the dashed line applies.

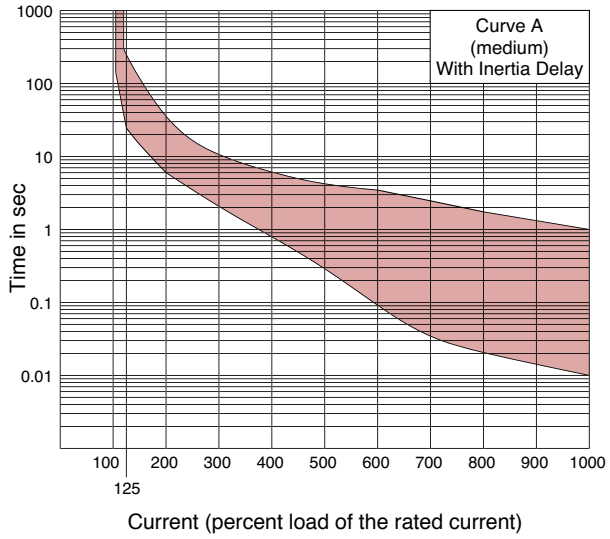

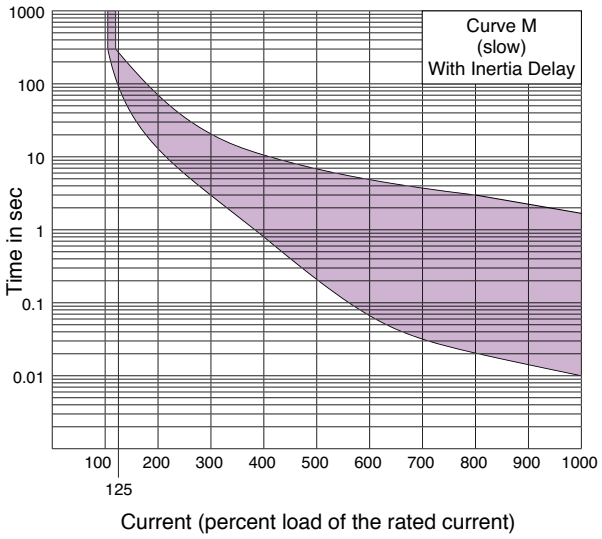

Time Delay Curve and Ambient Temperature

NC1V circuit breakers employ an electromagnetic tripping system, where the rated current (trip current) is not affected by ambient temperatures. But the time delay may vary with the oil viscosity in the oil dash pot. Lower oil viscosity at higher temperatures results in a shorter delay, whereas at lower temperatures the delay will be longer.

Temperature Correction Curve

The time delay curves on the preceding page are measured at 40°C. With reference to the following curves, time delays can be corrected according to ambient temperature.

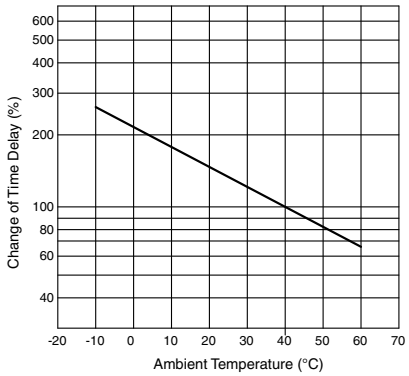

The time delay is based on an ambient temperature of 40°C. Time delays at other temperatures are corrected according to the temperature correction curve. The time delay of the instantaneous time delay curve (S) is not affected by the ambient temperature.

When operating temperature exceeds 40°C, derate the rated current by multiplying the derating factor shown on the right.

Operating Temp.	Derating Factor
50°C	0.9
55°C	0.8
60°C	0.7

Inertia Delay

Inertia delay is designed not to trip on a non-repeating single pulse of 20 times the rated current (peak value) for a duration of 8ms. In addition, circuit breakers equipped with inertia delay do not respond to high inrush currents caused by transformer or lamp loads, but perform the specified interruption on subsequent overcurrents. Inertia delay is available on AC circuits, and is not available with the series trip curve S (instantaneous).

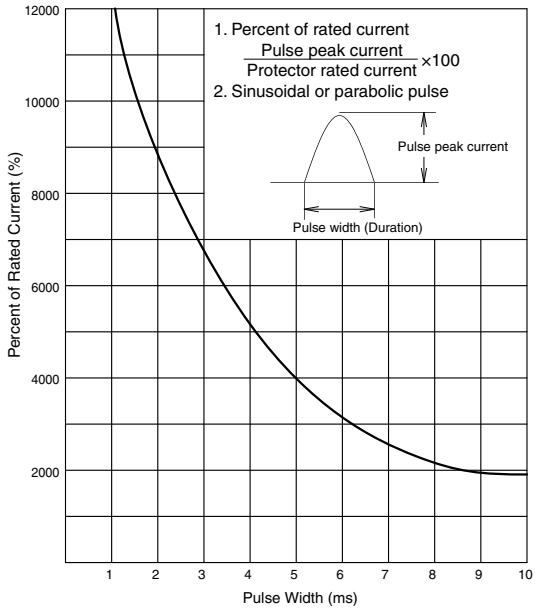

Impedance and Coil Resistance

• Series Trip (Current Trip)

at 25°C

Rated Current	For AC 50/60 Hz Impedance (Ω)		For DC Resistance (Ω)	
	Curve S	Curves A, M	Curve S	Curves A, M
0.1A	66.0	116.0	43.0	106.0
0.3A	6.6	11.0	4.1	10.0
0.5A	1.92	3.65	0.86	3.40
1A	0.50	0.93	0.25	0.90
2A	0.16	0.27	0.11	0.25
3A	0.07	0.12	0.050	0.11
5A	0.025	0.050	0.015	0.045
7A	0.014	0.027	0.011	0.025
10A	0.007	0.021	0.005	0.020
15A	0.006	0.010	0.005	0.009
20A	0.005	0.006	0.004	0.005
25A	0.004	0.005	0.004	0.005
30A	0.003	0.004	0.003	0.004

Tolerance: ±25% (up to 20A),
±50% (25A and 30A)

• Relay Trip (Voltage Trip)

at 25°C

Tripping Voltage	For DC Resistance (Ω)
24-48V	100.0

Tolerance: ±25%

Voltage Drop Due to Coil Resistance or Impedance

The internal resistance or impedance of a circuit breaker tends to be larger for a smaller rated current. Therefore, when circuit breakers with a small rated current are used, voltage drop should be taken into consideration. Internal resistance also varies with time delay curves, which should also be considered during installation.

Dimensions (mm)

• 1-pole

NC1V-1100

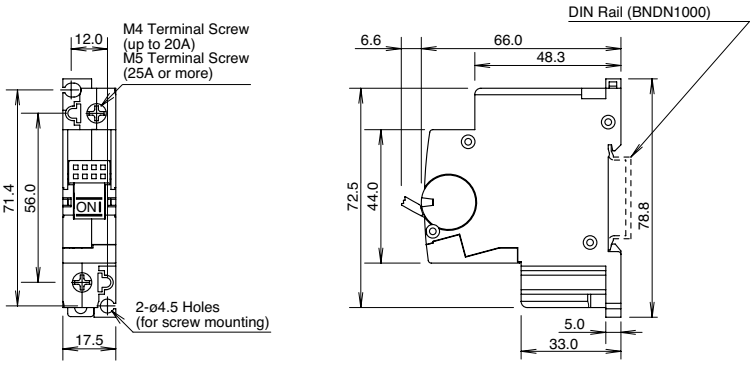

NC1V-1111
(Auxiliary Contact)
NC1V-1121
(Alarm Contact)

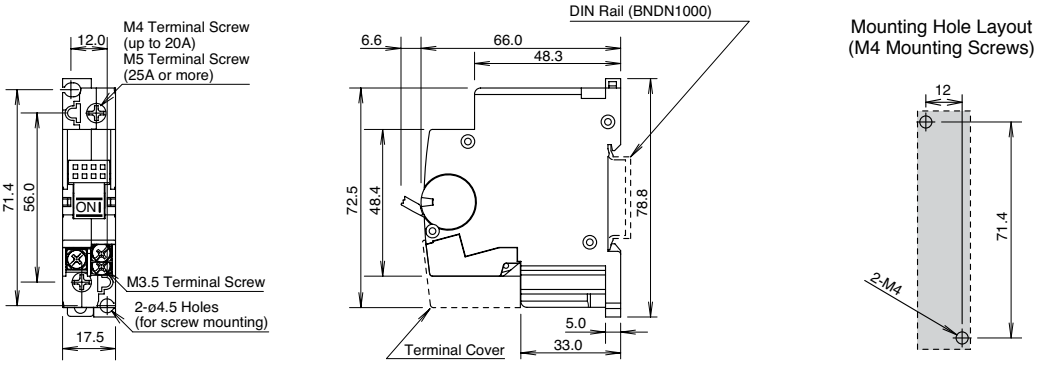

NC1V-1500
(Relay Trip)

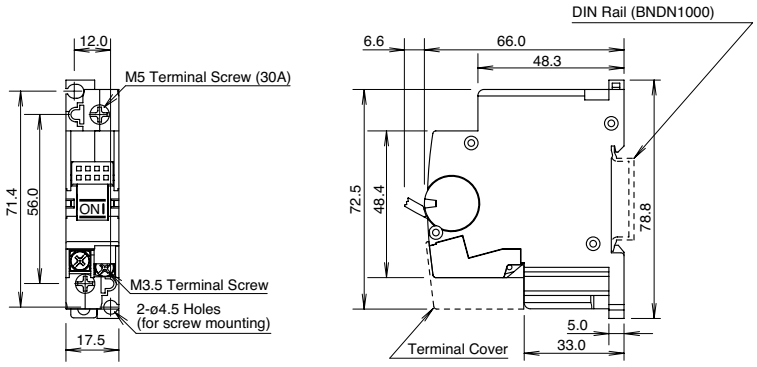

• 2-pole

NC1V-2100

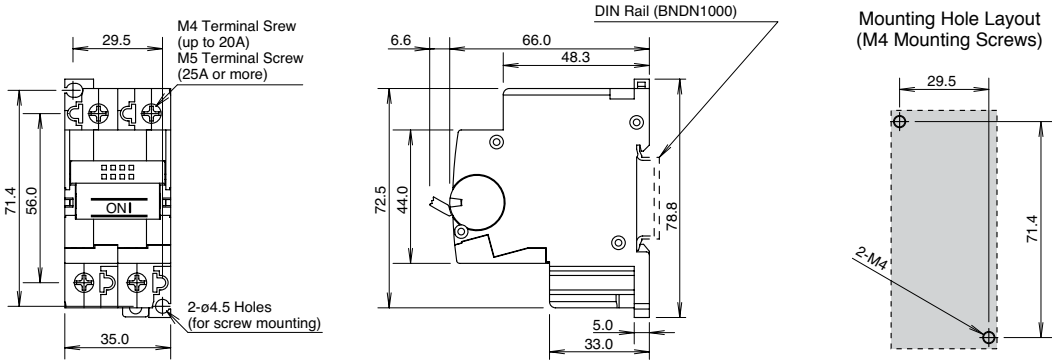

• 2-pole

NC1V-2111
(one auxiliary contact)
NC1V-2112
(two auxiliary contacts)
NC1V-2121
(one alarm contact)
NC1V-2131
(one auxiliary contact
and one alarm contact)

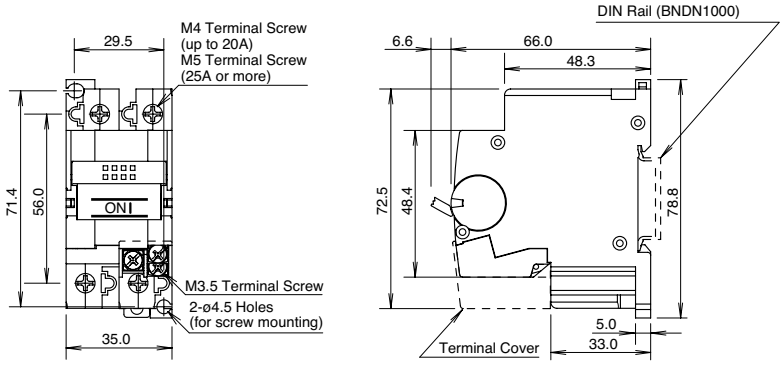

Dimensions shown are for NC1V-2111 and NC1V-2121.

Mounting Hole Layout
(M4 Mounting Screws)

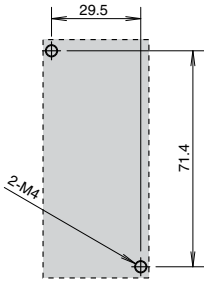

NC1V-2500
(Relay Trip)

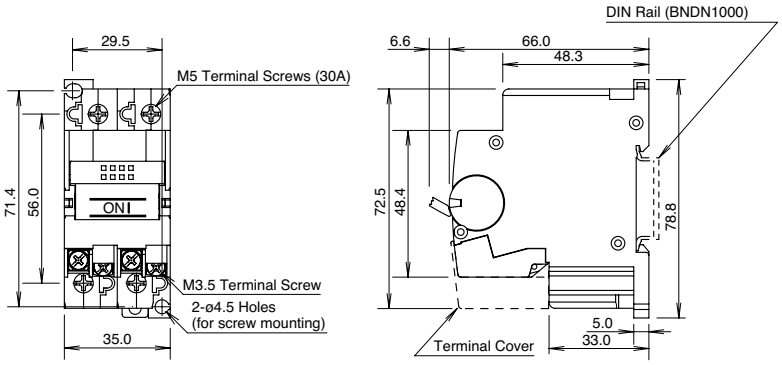

• 3-pole

NC1V-3100

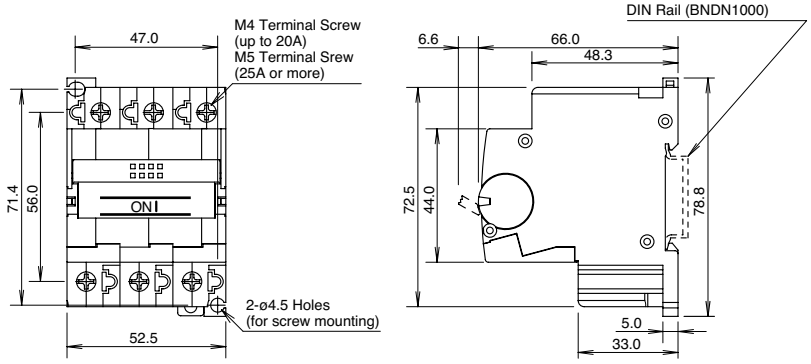

Mounting Hole Layout
(M4 Mounting Screws)

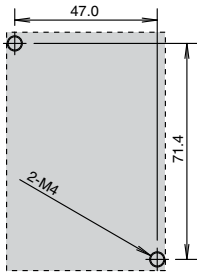

NC1V-3111
(one auxiliary contact)
NC1V-3112
(two auxiliary contacts)
NC1V-3113
(three auxiliary contacts)
NC1V-3121
(one alarm Contact)
NC1V-3131
(one auxiliary contact
and one alarm contact)
NC1V-3132
(two auxiliary contacts
and one alarm contact)

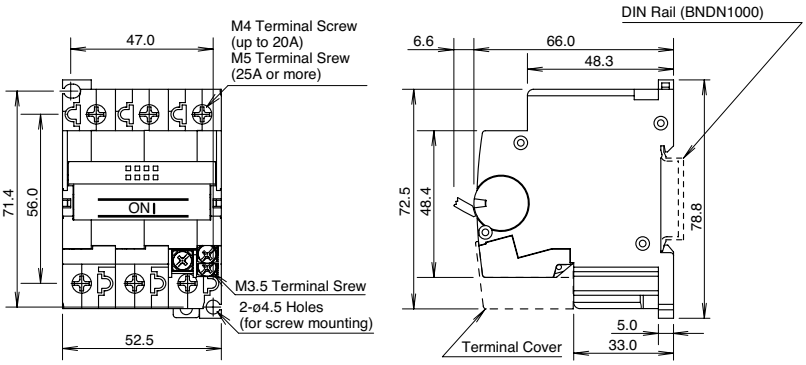

Dimensions shown are for NC1V-3111 and NC1V-3121.

• **3-pole**

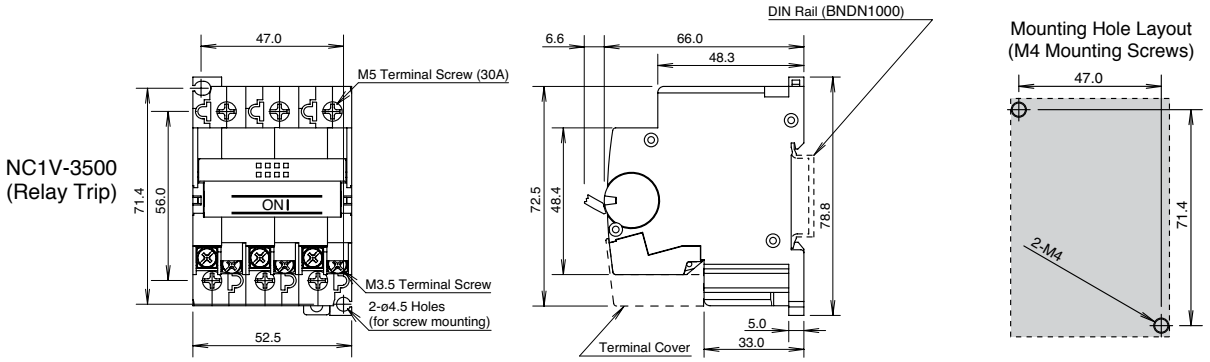

Instructions

• Installation Angle

Tripping method is hydraulic magnetic. Minimum operating current varies with installation angle. Operating currents are influenced by the weight of movable iron core. With reference to the following figures, correct the rated current.

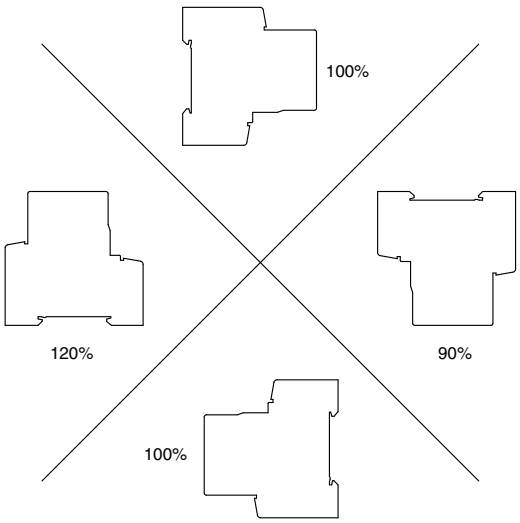

Minimum operating current is calculated from the following formula:
(Minimum operating current) = (Rated current) × (Correction factor by installation angle) × (Reference minimum tripping current rate)

• DIN Rails

[Installation on DIN Rail]
1. Fasten the DIN rail securely.
2. With the latch facing downward, install the NC1V circuit breaker on the DIN rail as shown below.

[Removal from DIN Rail]
Using a flat screwdriver, pull the latch on the circuit breaker to remove from the DIN rail.

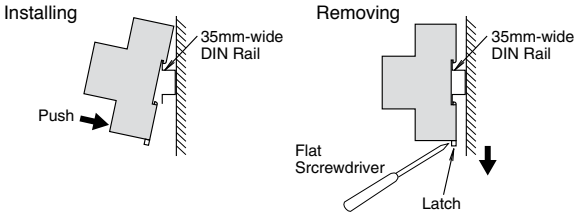

• Applicable Wire and Crimp Terminals

Terminal	Terminal Screw	Connectable Wire Size (mm^2)	Applicable Crimping Terminal	Tightening Torque (N·m)
Main Circuit Terminals	Spring-up, fingersafe, slotted Phillips screw with square washer (up to 20A)	0.25 to 1.65	R1.25-4	1 to 1.4
		1.04 to 2.63	R2-4	
		2.63 to 6.64	R5.5-4	
	Spring-up fingersafe terminal (25A and 30A)	0.25 to 1.65	R1.25-5	1.8 to 2.2
		1.04 to 2.63	R2-5	
		2.63 to 6.64	R5.5-5	
Auxiliary Contact Alarm Contact Voltage Coil Terminals	Slotted Phillips screw with square washer	0.25 to 1.65	R1.25-3.5	0.7 to 0.9
		1.04 to 2.63	R2-3.5	

• For wiring the main circuit terminal, use the applicable crimp terminals and tighten to the recommended torque.
• When using the NC1V circuit breaker as CSA-certified product, use with CSA-certified crimp terminal.
• When using the NC1V circuit breaker as UL-listed product, use with UL-listed crimp terminal.

Panel Mounting Screws (not supplied)

Srew Type	Tightening Torque	Shape
M4	0.8 to 1.0 N·m	Spring Washer, Plain Washer

Product Markings (Example: NC1V-1111-30AA)

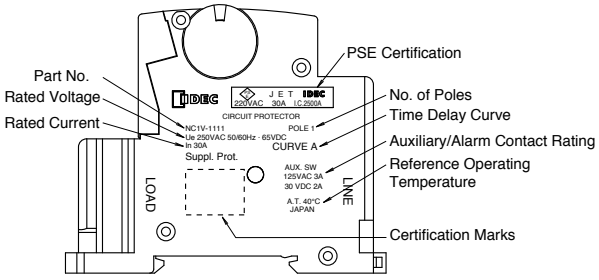

Installation of Auxiliary/Alarm Terminal Cover

After wiring the terminals, install the terminal cover by aligning with the circuit breaker as shown below.

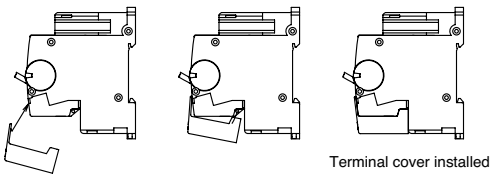

Accessories

Item	Part No.	Description
	NC9Z-MA11	Panel Cut-Out Mounting bracket for 1-pole model
	NC9Z-MA21	Panel Cut-Out Mounting bracket for 2-pole model
	NC9Z-MA31	Panel Cut-Out Mounting bracket for 3-pole model
	NC9Z-TA1	Replacement Wiring Clip when using panel mount brackets

Item	Part No.	Description
	NC9Z-PW1	Marking Plate Holder*
	NC9Z-LK1	Padlock attachment
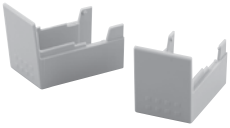	NC1V-AUX-CV	Auxiliary/Alarm Terminal Cover (Nylon - PA66)

*Marking plate not supplied.

Specifications and other descriptions in this catalog are subject to change without notice.

IDEC

IDEC CORPORATION
7-31, Nishi-Miyahara 1-Chome, Yodogawa-ku, Osaka 532-8550, Japan
Tel: +81-6-6398-2571, Fax: +81-6-6392-9731
E-mail: products@idec.co.jp

IDEC CORPORATION (USA)
1175 Elko Drive, Sunnyvale, CA 94089-2209, USA
Tel: +1-408-747-0550 / (800) 262-IDEC (4332)
Fax: +1-408-744-9055 / (800) 635-6246
E-mail: opencontact@idec.com

IDEC CANADA LIMITED
3155 Pepper Mill Court, Unit 4, Mississauga, Ontario, L5L 4X7, Canada
Tel: +1-905-890-8561, Toll Free: (888) 317-4332
Fax: +1-905-890-8562
E-mail: sales@ca.idec.com

IDEC AUSTRALIA PTY. LTD.
2/3 Macro Court, Rowville, Victoria 3178, Australia
Tel: +61-3-9763-3244, Toll Free: 1800-68-4332
Fax: +61-3-9763-3255
E-mail: sales@au.idec.com

IDEC ELECTRONICS LIMITED
Unit 2, Beechwood, Chineham Business Park, Basingstoke, Hampshire RG24 8WA, UK
Tel: +44-1256-321000, Fax: +44-1256-327755
E-mail: sales@uk.idec.com

IDEC ELEKTROTECHNIK GmbH
Wendenstrasse 331, 20537 Hamburg, Germany
Tel: +49-40-25 30 54 - 0, Fax: +49-40-25 30 54 - 24
E-mail: service@idec.de

IDEC (SHANGHAI) CORPORATION
Room 608-609, 6F, Gangtai Plaza, No. 700, Yan'an East Road, Shanghai 200001, PRC
Tel: +86-21-5353-1000, Fax: +86-21-5353-1263
E-mail: idec@cn.idec.com

IDEC (BEIJING) CORPORATION
Room 211B, Tower B, The Grand Pacific Building, 8A Guanghua Road, Chaoyang District, Beijing 100026, PRC
Tel: +86-10-6581-6131, Fax: +86-10-6581-5119

IDEC (SHENZHEN) CORPORATION
Unit AB-3B2, Tian Xiang Building, Tian'an Cyber Park, Fu Tian District, Shenzhen, Guang Dong 518040, PRC
Tel: +86-755-8356-2977, Fax: +86-755-8356-2944

IDEC IZUMI (H.K.) CO., LTD.
Units 11-15, Level 27, Tower 1, Millennium City 1, 388 Kwun Tong Road, Kwun Tong, Kowloon, Hong Kong
Tel: +852-2803-8989, Fax: +852-2565-0171
E-mail: info@hk.idec.com

IDEC TAIWAN CORPORATION
8F-1, No. 79, Hsin Tai Wu Road, Sec. 1, Hsi-Chih, Taipei County, Taiwan
Tel: +886-2-2698-3929, Fax: +886-2-2698-3931
E-mail: service@tw.idec.com

IDEC IZUMI ASIA PTE. LTD.
No. 31, Tannery Lane #05-01, HB Centre 2, Singapore 347788
Tel: +65-6746-1155, Fax: +65-6844-5995
E-mail: info@sg.idec.com

www.IDEC.com

Cat. No. NC9Y-B100-1 PRINTED IN U.S.A. 5K 09/10